Statistics: Mountain Climate Line Graphs

Aim:	**Success Criteria:**	**Resources:**
Solve comparison, sum and difference problems using information presented in a line graph. I can answer questions about data presented in a climate line graph.	I can interpret data in bar charts and line graphs. I can identify the features of a line graph. I can answer comparison, sum and difference questions about data presented in a line graph.	**Lesson Pack**
	Key/New Words: Line graph, bar chart, data, axis, continuous data, climate graph.	**Preparation:** **Mega Mountains Bar Chart Handout** – as required **Mount Fuji Graph Handout** – as required **Mount Everest Graph Handout** – as required Differentiated **Mountain Climate Line Graphs Activity Sheets** – one per child **Mountain Rainfall Line Graph Handout** – as required **Find My Match Mountain Line Graph Cards** – one per class or group

Prior Learning: It will be helpful if children have experience of interpreting data in bar charts and line graphs.

Learning Sequence

	Mega Mountains Bar Chart Reveal: Referring to the bar chart displayed on the **Lesson Presentation** or on the **Mega Mountains Bar Chart Handout**, the children answer questions about the height in metres of six of the world's tallest mountains to reveal a hidden picture.	
	Mount Fuji Climate: Discuss the table of data shown on the **Lesson Presentation** which shows the average temperature in °C for each month on Mount Fuji in Japan. Ask the children how they would present this data as a graph, explaining their reasoning. Then discuss the next table of data which shows the average temperature and average rainfall for each month on Mount Fuji. Ask the children how they would present both sets of data on the same graph, explaining their reasoning.	
	Mount Fuji Climate Graph: Using the graph shown on the **Lesson Presentation** or on the **Mount Fuji Graph Handout** explain the features of a climate graph, drawing attention to how the graph displays the rainfall data as a bar chart using the left-hand axis and the temperature data as a line graph on the right-hand axis. Rehearse how to answer questions about the two sets of data by reading the climate graph correctly.	
	Comparing Two Mountain Climates: Using the graph shown on the **Lesson Presentation** or on the **Mount Everest Graph Handout** explain how the climate data for Mount Fuji and Mount Everest have been shown on the same graph. Draw attention to the use of a key/legend to identify the different sets of data. Demonstrate how to answer a question comparing the two sets of data correctly by reading the line graph.	
	Mountain Climate Line Graphs: Children complete the differentiated **Mountain Climate Line Graph Activity Sheets** to show they can answer questions about data presented in climate line graphs. Interpret the climate graph correctly to answer simpler questions about the rainfall and temperature of a mountain climate. Interpret the climate graph correctly to answer questions about the rainfall and temperature of a mountain climate. Interpret the climate graph correctly to answer questions about the rainfall and temperature of two different mountain climates.	
	Find My Match Mountain Line Graph: Hand out the shuffled **Find My Match Mountain Line Graph Cards**, one to each child. Each card displays either a question or answer that corresponds to the graph shown on the **Lesson Presentation** and on the **Mountain Rainfall Line Graph Handout**. The children have three minutes to quietly move around the classroom to find their matching card.	

Masterit

Challengeit: Challenge children to make their own climate graphs for different climates of the world and to write and answer questions based on them.

ICTit: Demonstrate to the children how to create climate graphs using spreadsheet software.

Maths

Statistics

Regent Studies | www.regentstudies.com

Mountain Climate Line Graphs

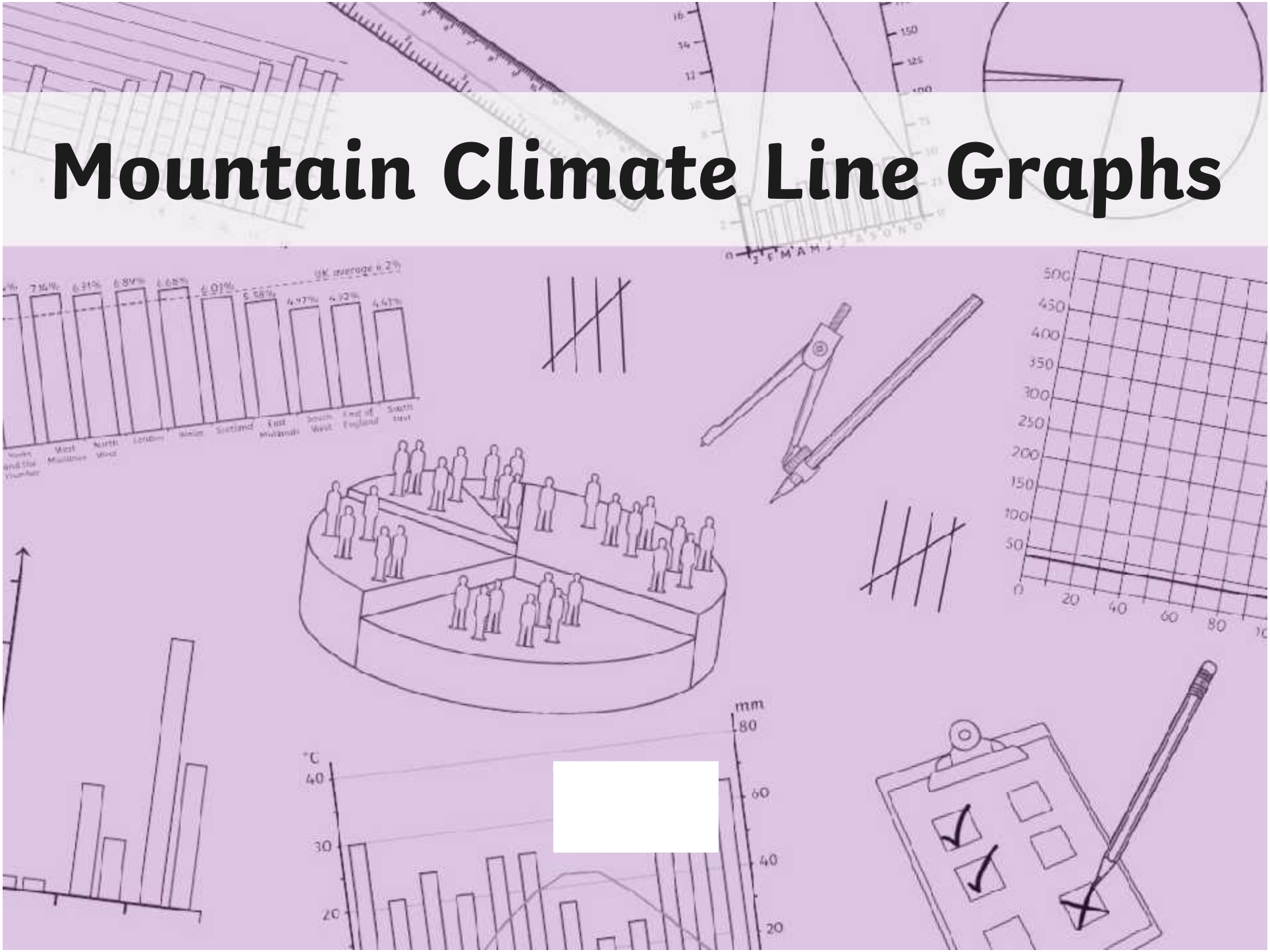

Aim

- I can answer questions about data presented in a line graph.

Success Criteria

- I can interpret data in bar charts and line graphs.
- I can identify the features of a line graph.
- I can answer comparison, sum and difference questions about data presented in a line graph.

Mega Mountains Bar Chart Reveal

Choose a question to answer about the bar chart. Click on the box once to check your answer and then again to reveal a part of the picture!

What is the height of the tallest mountain?	What is the difference in height between Mount Everest and Mount McKinley?	What is the height in total of Aconcagua and Mount McKinley?
What is the height in total of Vinson Massif and Mount Everest?	What is the height of the mountain on the continent of Europe?	What is the difference in height between Aconcagua and Kilimanjaro?
What is the difference in height between Elbrus and Mount Everest?	What is the height of the smallest mountain?	What is the difference in height between Vinson Massif and Mount McKinley?
What is the total height of Kilimanjaro and Elbrus?	What is the height in total of the three tallest mountains?	What is the height of the mountain on the continent of North America?

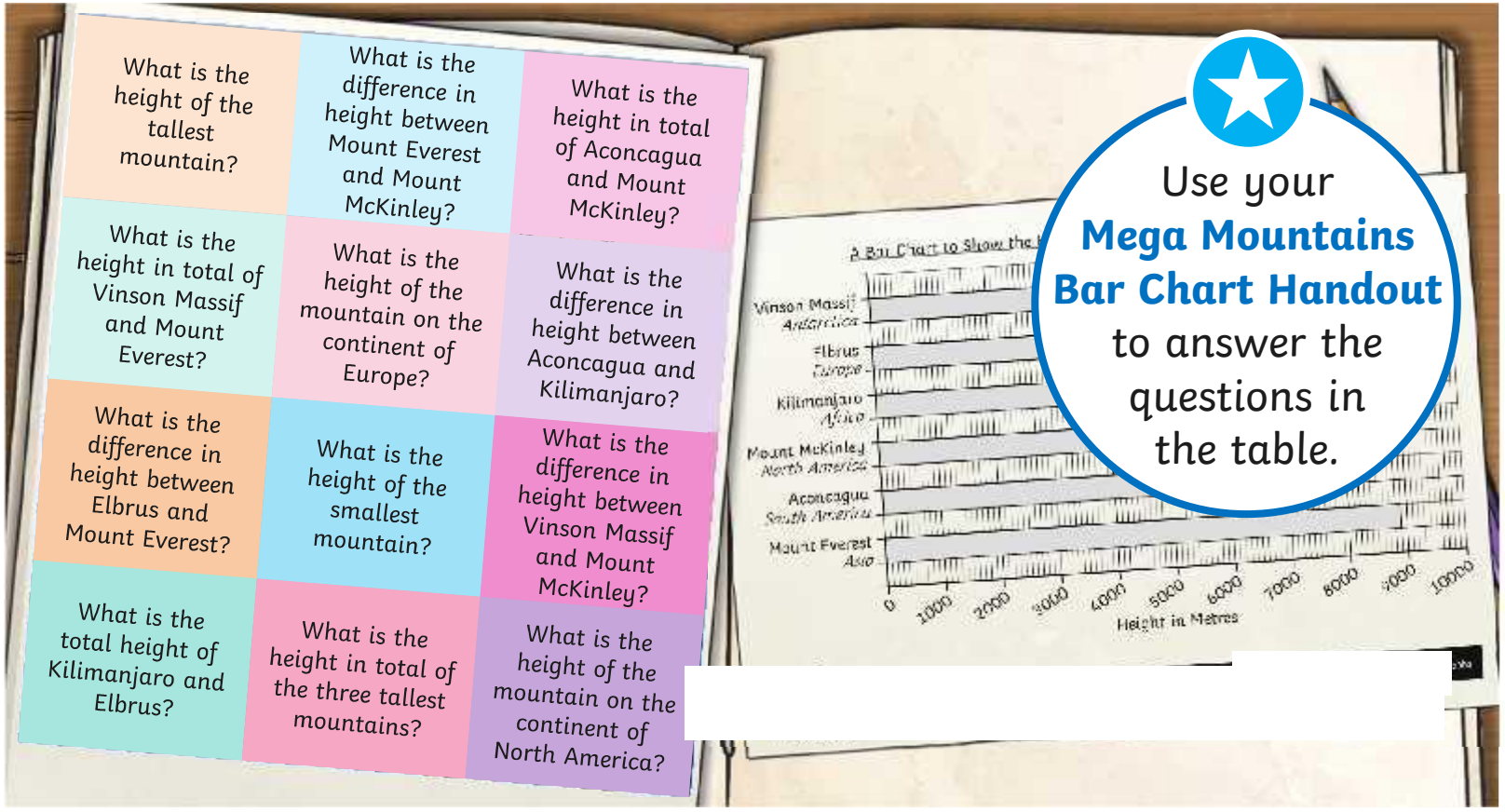

Mount Fuji Climate

In their topic lesson, Class 5 are investigating the climate of Mount Fuji in Japan.

Month	Average Temp (°C)	Month	Average Temp (°C)
Jan	-19	Jul	5
Feb	-18	Aug	6
Mar	-15	Sep	
April	-9	Oct	

Lian and Klaudia use the Internet to find the average temperature each month in Mount Fuji. Here is the table of data they created.

Lian and Klaudia want to present their results as a graph.

Mount Fuji Climate

Lian and Klaudia also use the Internet to find out the average amount of rainfall each month on Mount Fuji.

Month	Average Temp (°C)	Average Rainfall (mm)	Month	Average Temp (°C)	Average Rainfall (mm)
Jan	-19	50	Jul	5	160
Feb	-18	60	Aug	6	
Mar	-15	120	Sep	3	
April	-9	130	Oct	-3	

They want to present the information about the average temperature and average rainfall on the same graph.

What type of graph do you think they should use to of ur

Mount Fuji Climate Graph

Whole Class

Mrs. Chambers helped Lian and Klaudia to present both sets of data using a **climate graph**.

What is the difference between average temperature and Mount Fuji and June?

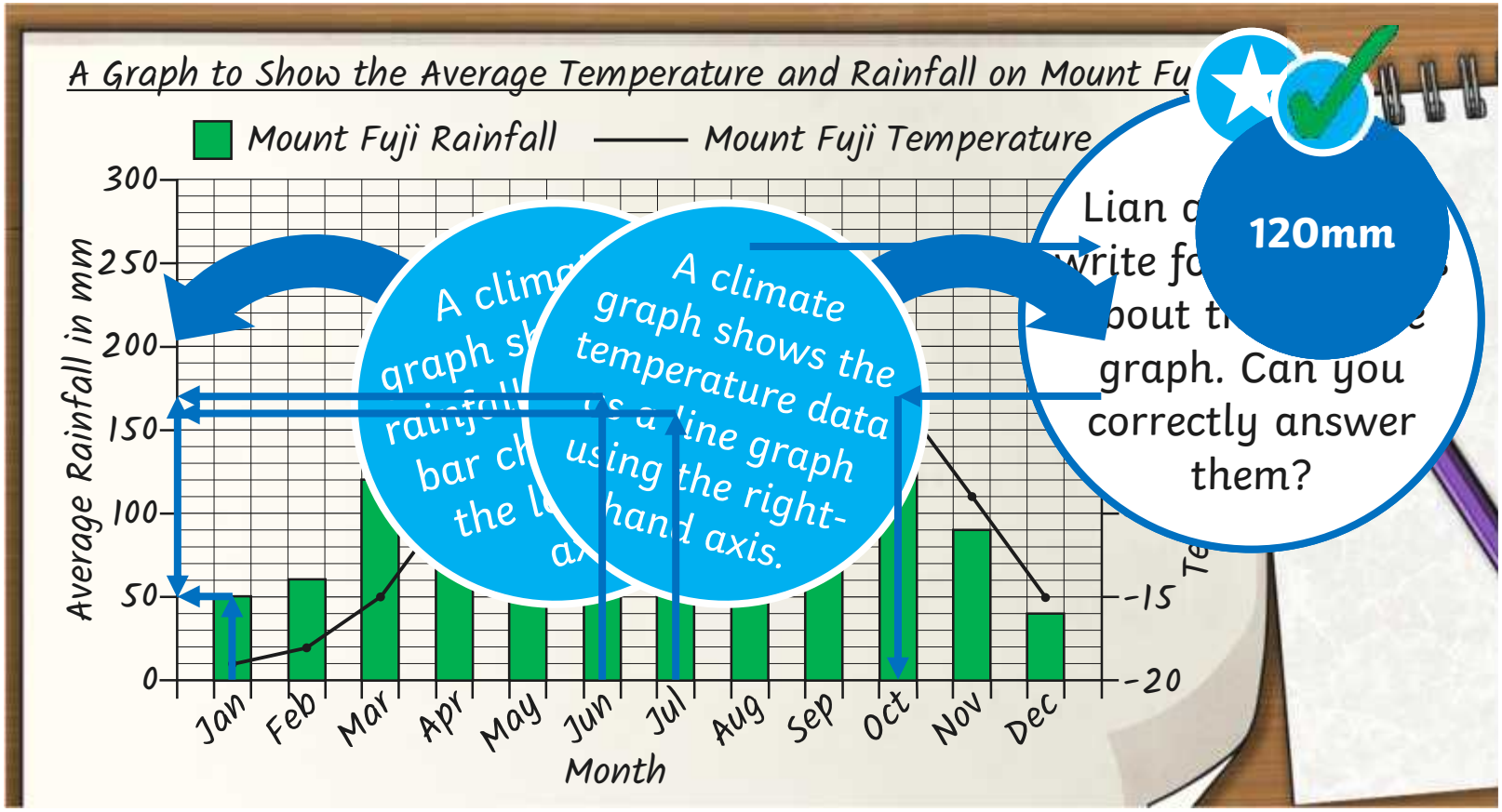

Comparing Two Mountain Climates

Whole Class

Next, it is the difference between the highest and the average temperatures of the two mountain climates?

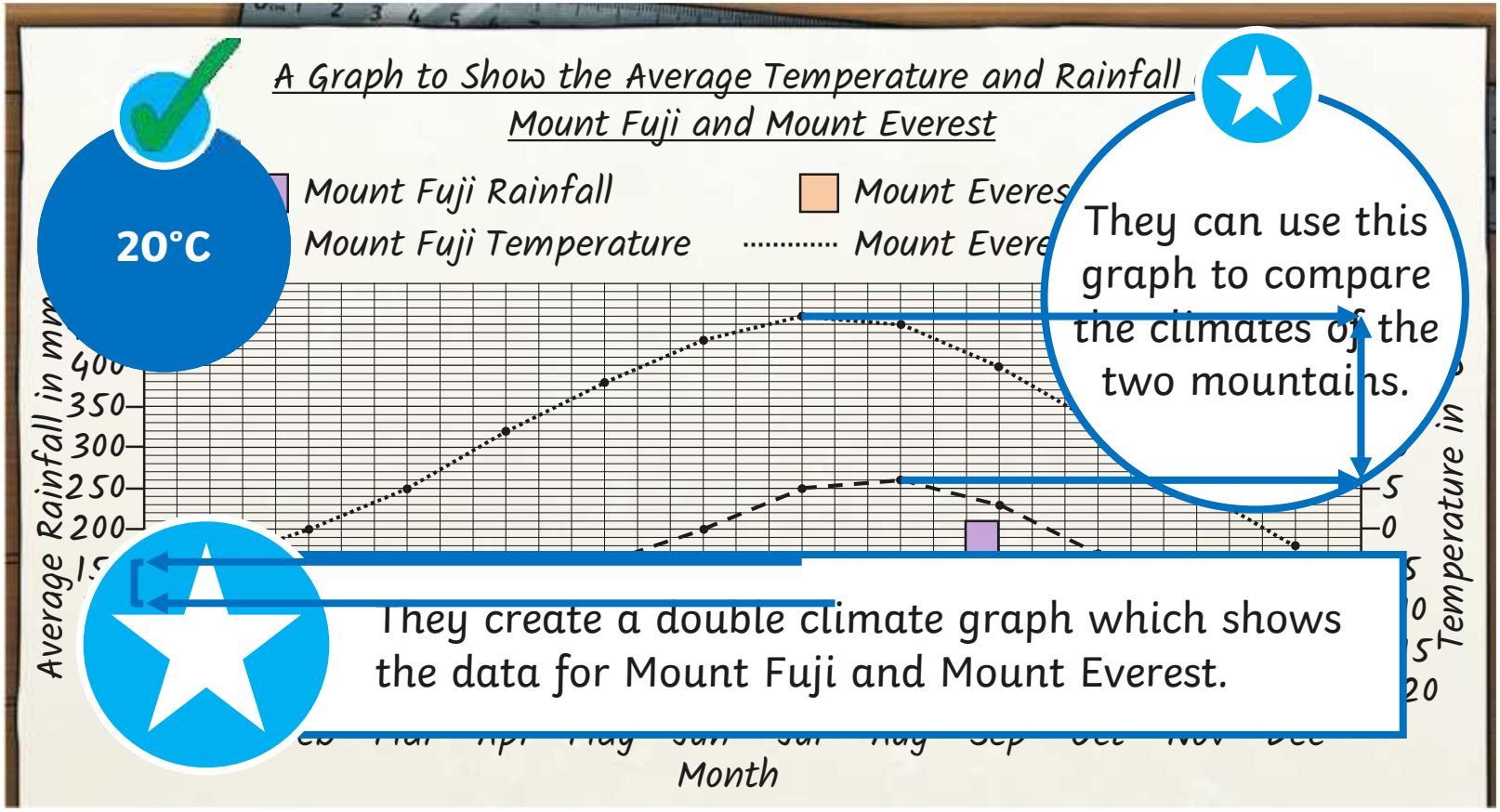

Mountain Climate Line Graphs

Use your stunning statistics skills to complete these activities:

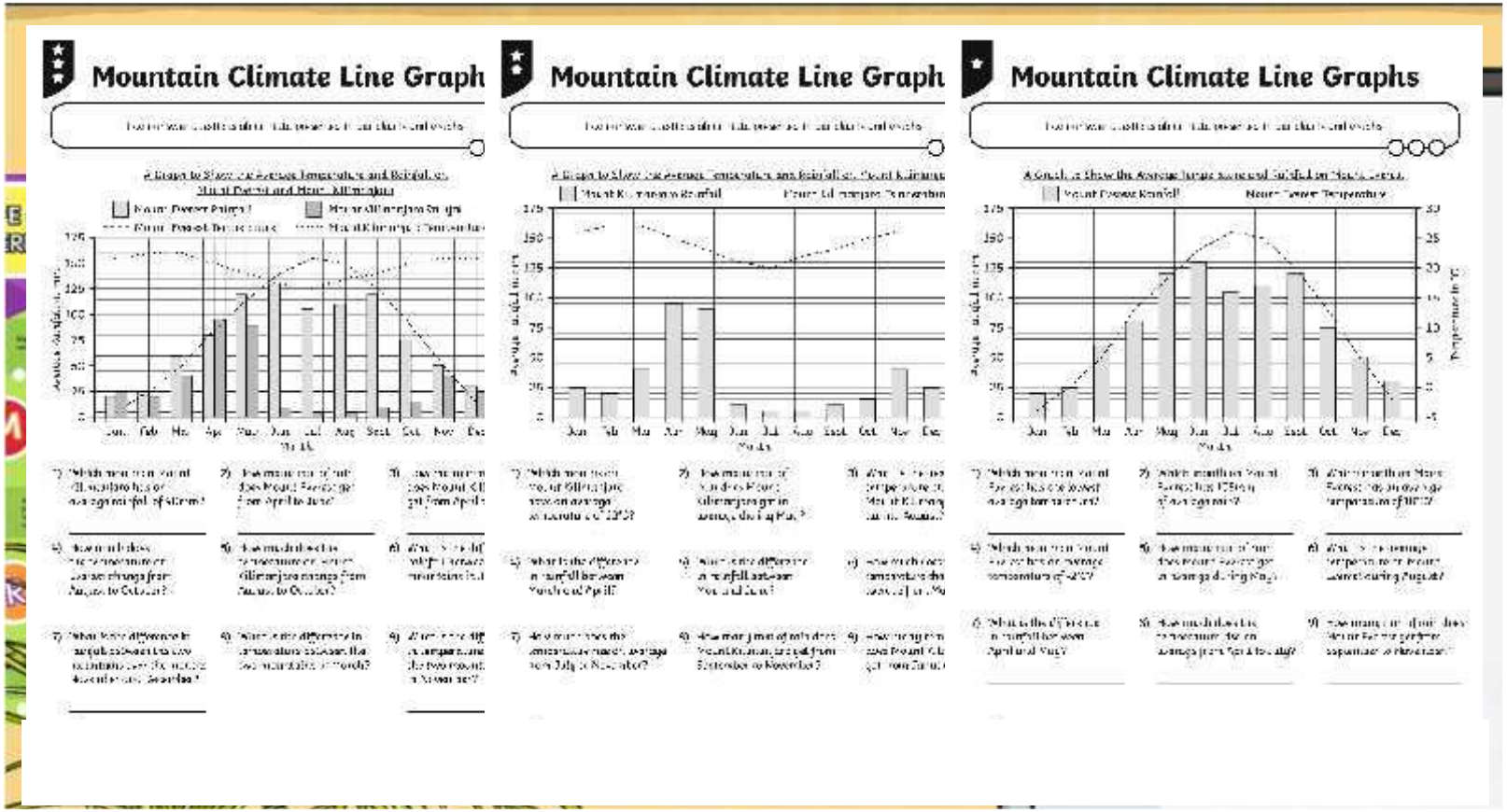

Find My Match Mountain Line Graph

Hand out the question and answer cards for this graph. You have three minutes to move around the classroom to find your matching card.

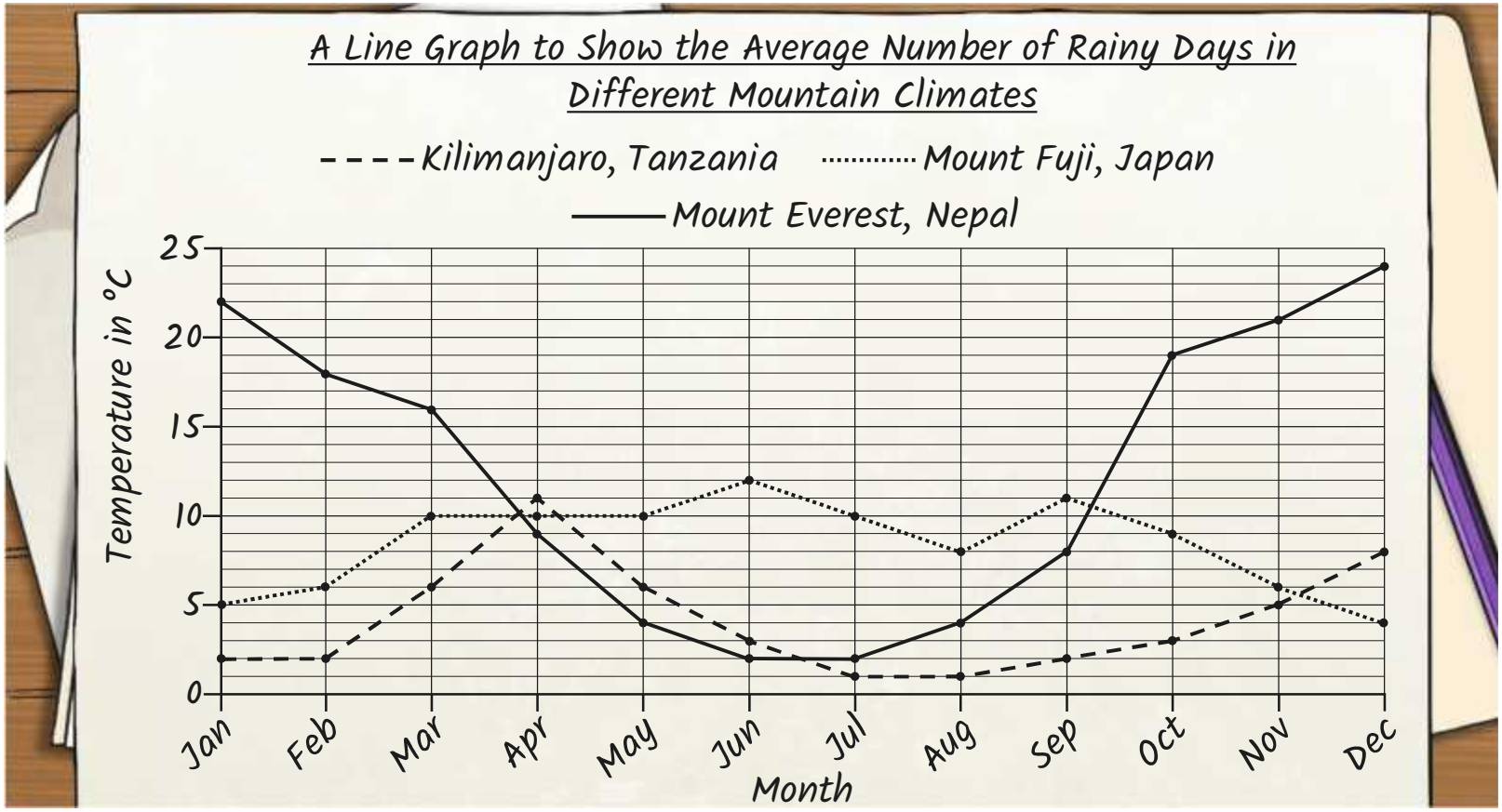

Find My Match

Aim

- I can answer questions about data presented in a line graph.

Success Criteria

- I can interpret data in bar charts and line graphs.
- I can identify the features of a line graph.
- I can answer comparison, sum and difference questions about data presented in a line graph.

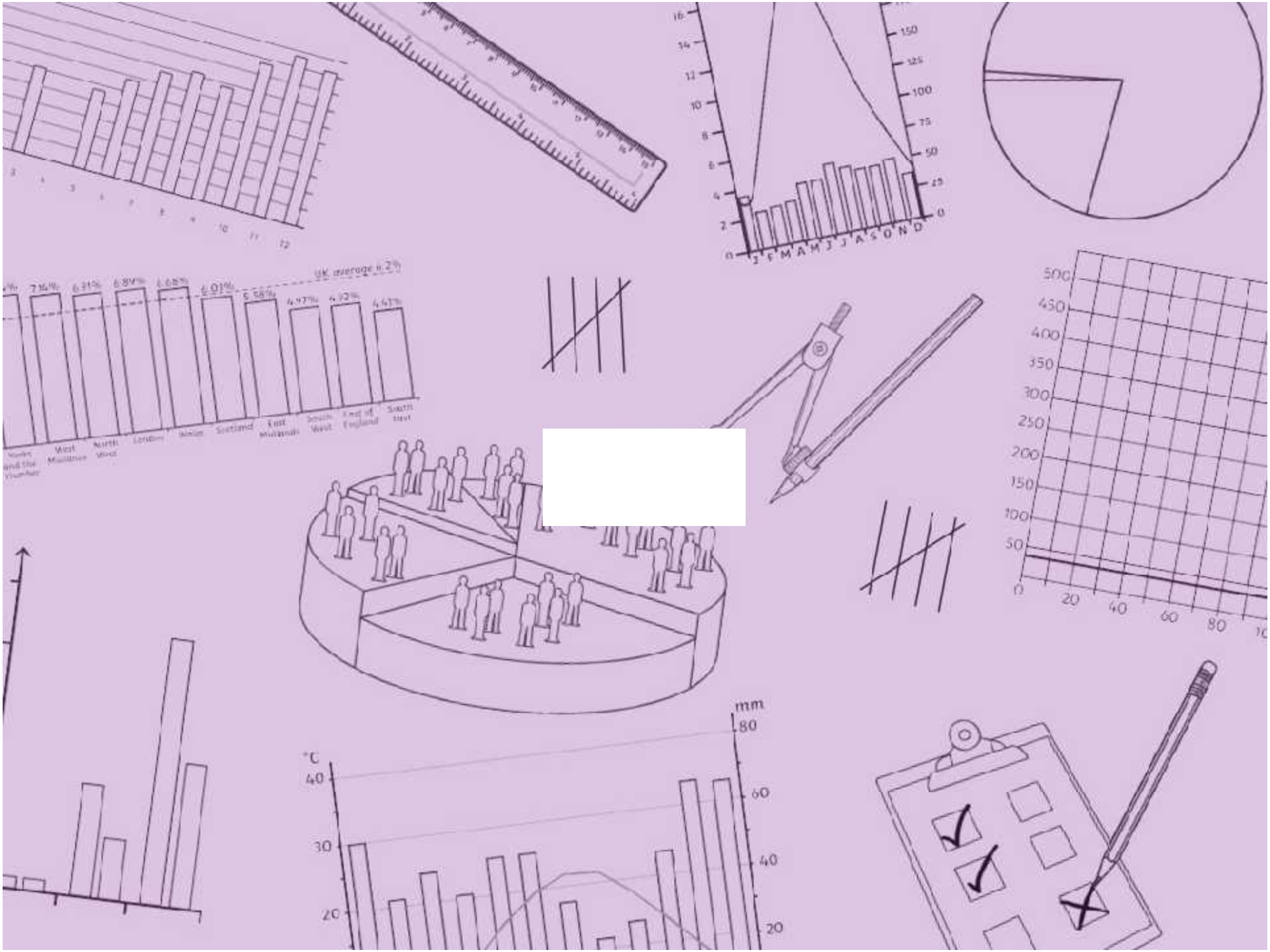
J F M A M J J A S O N D
UK average = 2%
mm
°C

Aim: I can answer questions about data presented in a climate line graph.				**Date:**					
				Delivered By:			**Support:**		
Success Criteria	**Me**	**Friend**	**Teacher**	**T**	**PPA**	**S**	**I**	**AL**	**GP**
I can interpret data in bar charts and line graphs.				**Notes/Evidence**					
I can identify the features of a line graph.									
I can answer comparison, sum and difference questions about data presented in a line graph.									

Next Steps

- _____
- _____

T	Teacher	**I**	Independent
PPA	Planning, Preparation and Assessment	**AL**	Adult Led
S	Supply	**GP**	Guided Practice

Aim: I can answer questions about data presented in a climate line graph.				**Date:**					
				Delivered By:			**Support:**		
Success Criteria	**Me**	**Friend**	**Teacher**	**T**	**PPA**	**S**	**I**	**AL**	**GP**
I can interpret data in bar charts and line graphs.				**Notes/Evidence**					
I can identify the features of a line graph.									
I can answer comparison, sum and difference questions about data presented in a line graph.									

Next Steps

- _____
- _____

T	Teacher	**I**	Independent
PPA	Planning, Preparation and Assessment	**AL**	Adult Led
S	Supply	**GP**	Guided Practice

Mountain Climate Line Graphs

I can answer questions about data presented in a climate line graph.

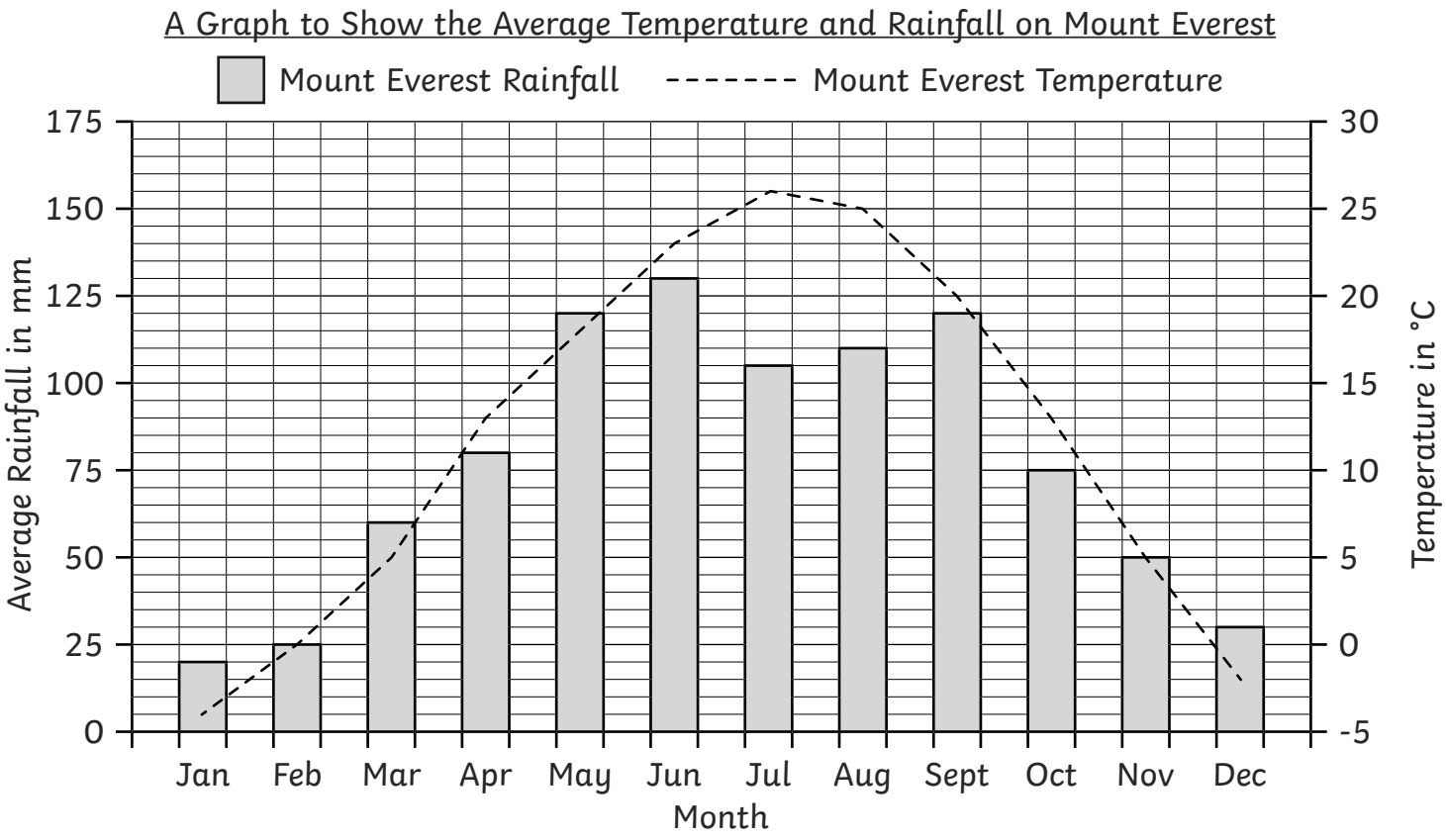

1) Which month on Mount Everest has the lowest average rainfall?

2) Which month on Mount Everest has the highest average temperature?

3) Which month on Mount Everest has the highest average rainfall?

4) Which month on Mount Everest has 105mm of average rain?

5) Which month on Mount Everest has an average temperature of 18°C?

6) How many mm of rain does Mount Everest get on average during May?

7) What is the difference in rainfall between April and May?

8) How much does the temperature rise on average from April to July?

9) How many mm of rain does Mount Everest get from September to November?

Mountain Climate Line Graphs **Answers**

Question	Answer
1.	Which month on Mount Everest has the lowest average rainfall?
	January
2.	Which month on Mount Everest has the highest average temperature?
	July
3.	Which month on Mount Everest has the highest average rainfall?
	June
4.	Which month on Mount Everest has 105mm of average rain?
	July
5.	Which month on Mount Everest has an average temperature of 18°C?
	May
6.	How many mm of rain does Mount Everest get on average during May?
	120 mm
7.	What is the difference in rainfall between April and May?
	40mm
8.	How much does the temperature rise on average from April to July?
	14°C
9.	How many mm of rain does Mount Everest get from September to November?
	245mm

Mountain Climate Line Graphs

I can answer questions about data presented in a climate line graph.

A Graph to Show the Average Temperature and Rainfall on Mount Kilimanjaro

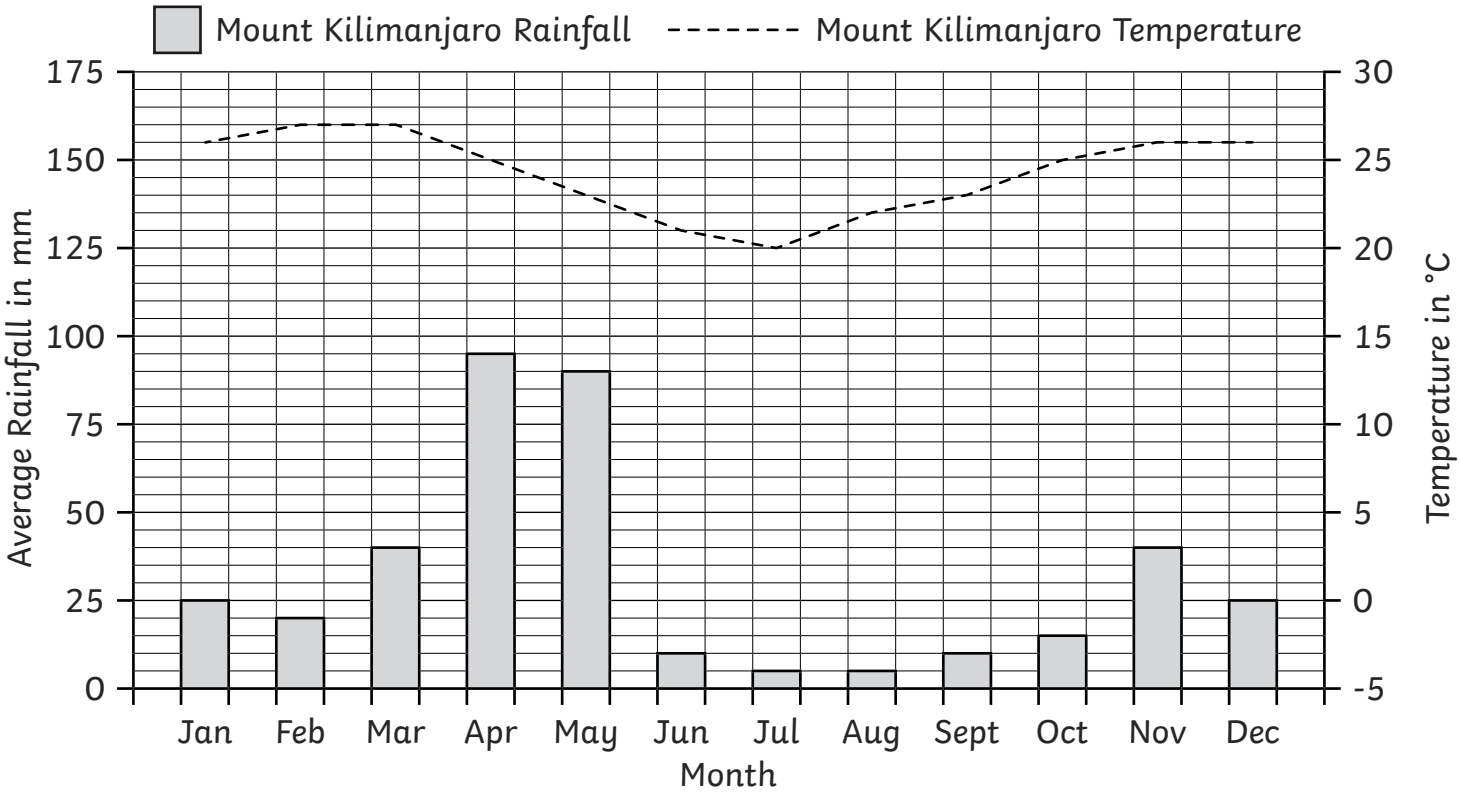

1) Which months on Mount Kilimanjaro have the lowest average rainfall?

2) Which months on Mount Kilimanjaro have the highest average temperature?

3) Which months on Mount Kilimanjaro have 10mm of average rain?

4) How many mm of rain does Mount Kilimanjaro get on average during May?

5) What is the difference in rainfall between March and April?

6) How much does the temperature fall on average from March to July?

7) How much does the temperature rise on average from July to November?

8) How many mm of rain does Mount Kilimanjaro get from September to November?

9) How many mm of rain does Mount Kilimanjaro get from January to May?

Mountain Climate Line Graphs **Answers**

Question	Answer
1.	Which months on Mount Kilimanjaro have the lowest average rainfall?
	July and August
2.	Which months on Mount Kilimanjaro have the highest average temperature?
	February and March
3.	Which months on Mount Kilimanjaro have 10mm of average rain?
	June and September
4.	How many mm of rain does Mount Kilimanjaro get on average during May?
	90mm
5.	What is the difference in rainfall between March and April?
	55m
6.	How much does the temperature fall on average from March to July?
	7°C
7.	How much does the temperature rise on average from July to November?
	6°C
8.	How many mm of rain does Mount Kilimanjaro get from September to November?
	65mm
9.	How many mm of rain does Mount Kilimanjaro get from January to May?
	270mm

Mountain Climate Line Graphs

I can answer questions about data presented in a climate line graph.

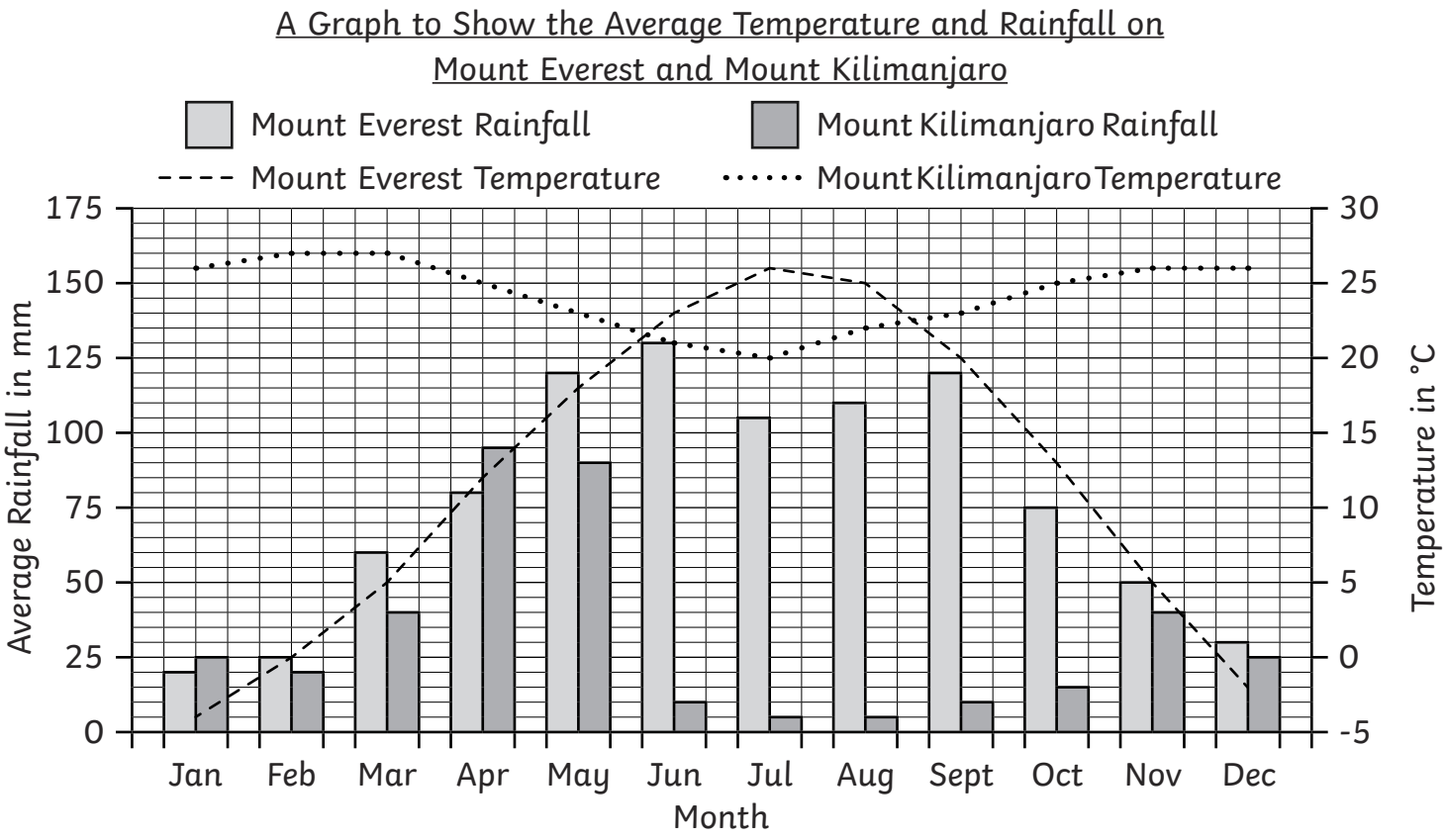

1) Which month on Mount Everest has an average rainfall of 80mm?

2) Which months on Mount Kilimanjaro have an average temperature of 25°C?

3) Which month on Mount Kilimanjaro has an average rainfall of 90mm?

4) How many mm of rain does Mount Everest get from April to June?

5) How many mm of rain does Mount Kilimanjaro get from April to June?

6) How much does the temperature on Everest change on average from August to October?

7) What is the difference in rainfall between the two mountains in June?

8) What is the difference in rainfall between the two mountains over the months November and December?

9) What is the difference in temperature between the two mountains in November?

Mountain Climate Line Graphs **Answers**

Question	Answer
1.	Which month on Mount Everest has an average rainfall of 80mm?
	April
2.	Which months on Mount Kilimanjaro have an average temperature of 25°C?
	April and October
3.	Which month on Mount Kilimanjaro has an average rainfall of 90mm?
	May
4.	How many mm of rain does Mount Everest get from April to June?
	330mm
5.	How many mm of rain does Mount Kilimanjaro get from April to June?
	195mm
6.	How much does the temperature on Everest change on average from August to October?
	12°C
7.	What is the difference in rainfall between the two mountains in June?
	120mm
8.	What is the difference in rainfall between the two mountains over the months November and December?
	15mm
9.	What is the difference in temperature between the two mountains in November?
	21°C

Find My Match Mountain Line Graphs Cards

Hand out the shuffled question and answer cards for the line graph shown on the presentation.

Move around the classroom to find the person with your matching card.

How many rainy days does Mount Everest have in March?

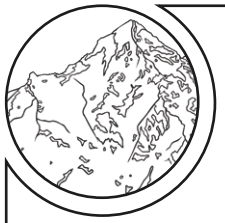

How many rainy days does Mount Fuji have in July?

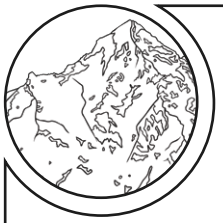

What is the difference of rainy days on Mount Kilimanjaro from February to March?

What is the difference in the number of rainy days in January on Mount Fuji and Mount Everest?

How many rainy days does Mount Fuji have in June?

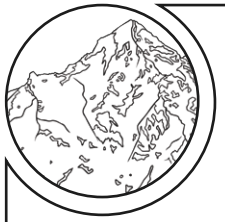

Which mountain has 21 rainy days in November?

What is the difference of rainy days on Mount Everest from February to March?

What is the difference in the number of rainy days in April on Mount Fuji and Mount Kilimanjaro?

How many rainy days does Mount Kilimanjaro have in May?

Which mountain has 10 rainy days in March?

What is the difference of rainy days on Mount Fuji from August to September?

What is the difference in the number of rainy days in June on Mount Fuji and Mount Kilimanjaro?

How many rainy days does Mount Everest have in September?

Which mountain has 11 rainy days in April?

What is the difference of rainy days on Mount Everest from September to October?

What is the difference in the number of rainy days in August on Mount Fuji and Mount Kilimanjaro?

8 rainy days

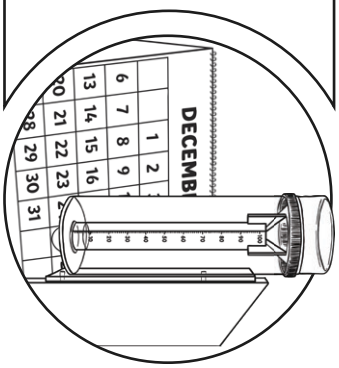

6 rainy days

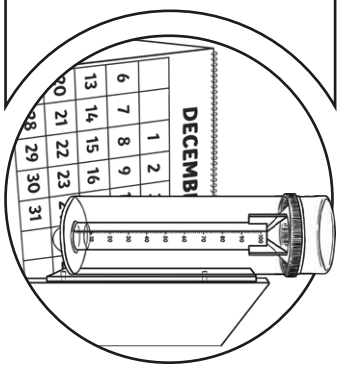

12 rainy days

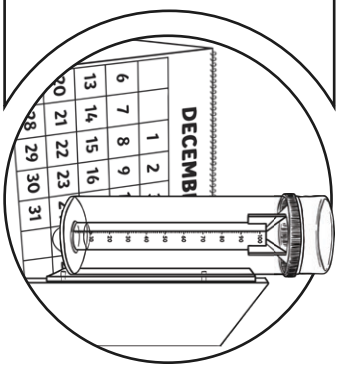

16 rainy days

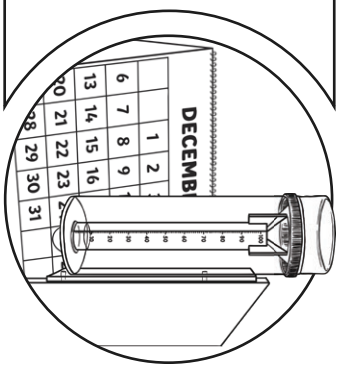

Mount Kilimanjaro

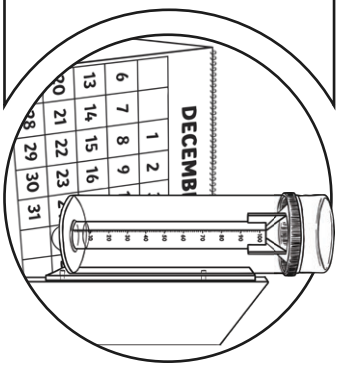

Mount Fuji

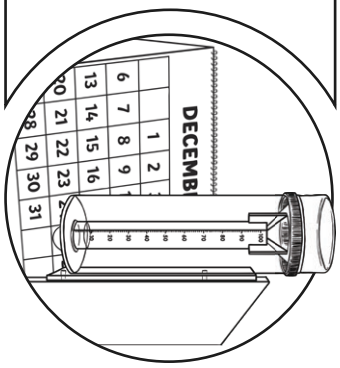

Mount Everest

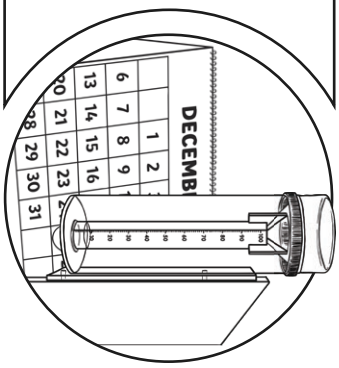

10 rainy days

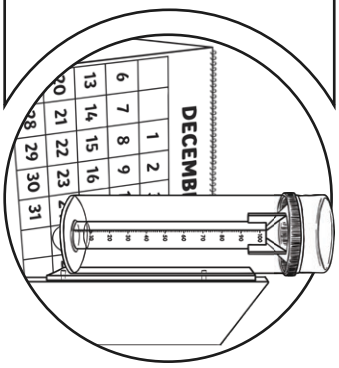

11 rainy days

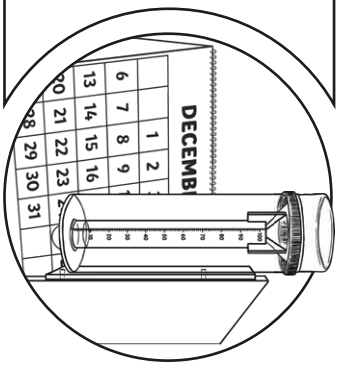

3 rainy days

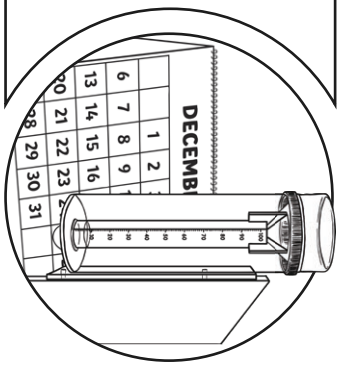

2 rainy days

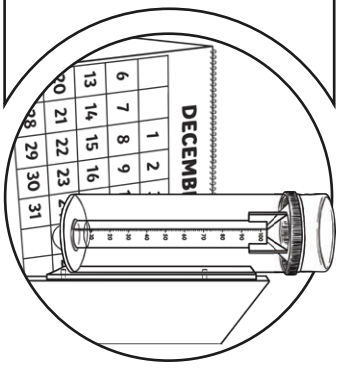

4 rainy days

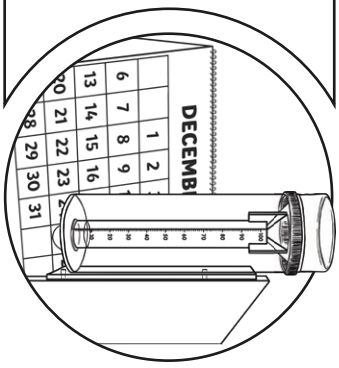

7 rainy days

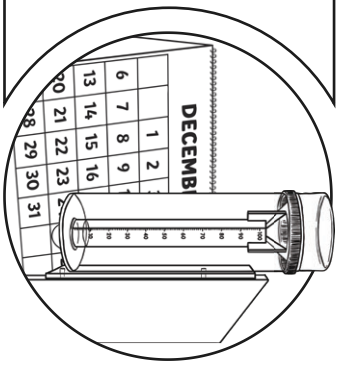

9 rainy days

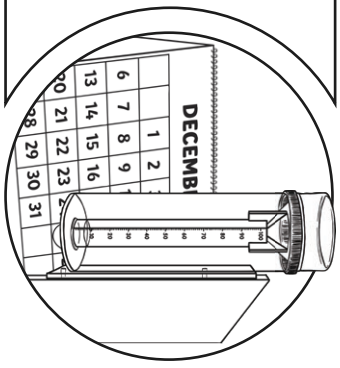

1 rainy day

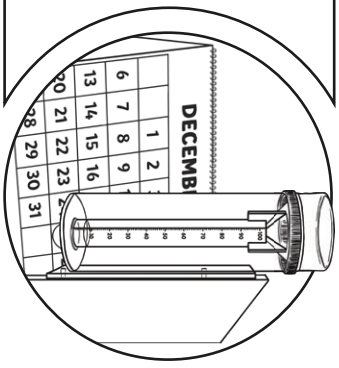

17 rainy days

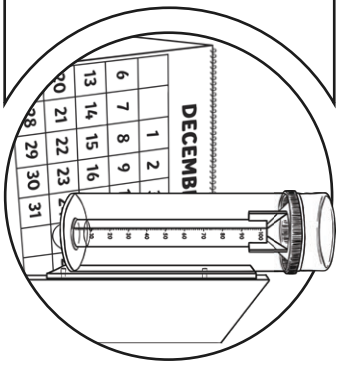

Regent Studies | www.regentstudies.com

A Bar Chart to Show the Heights of the World's Tallest Mountains

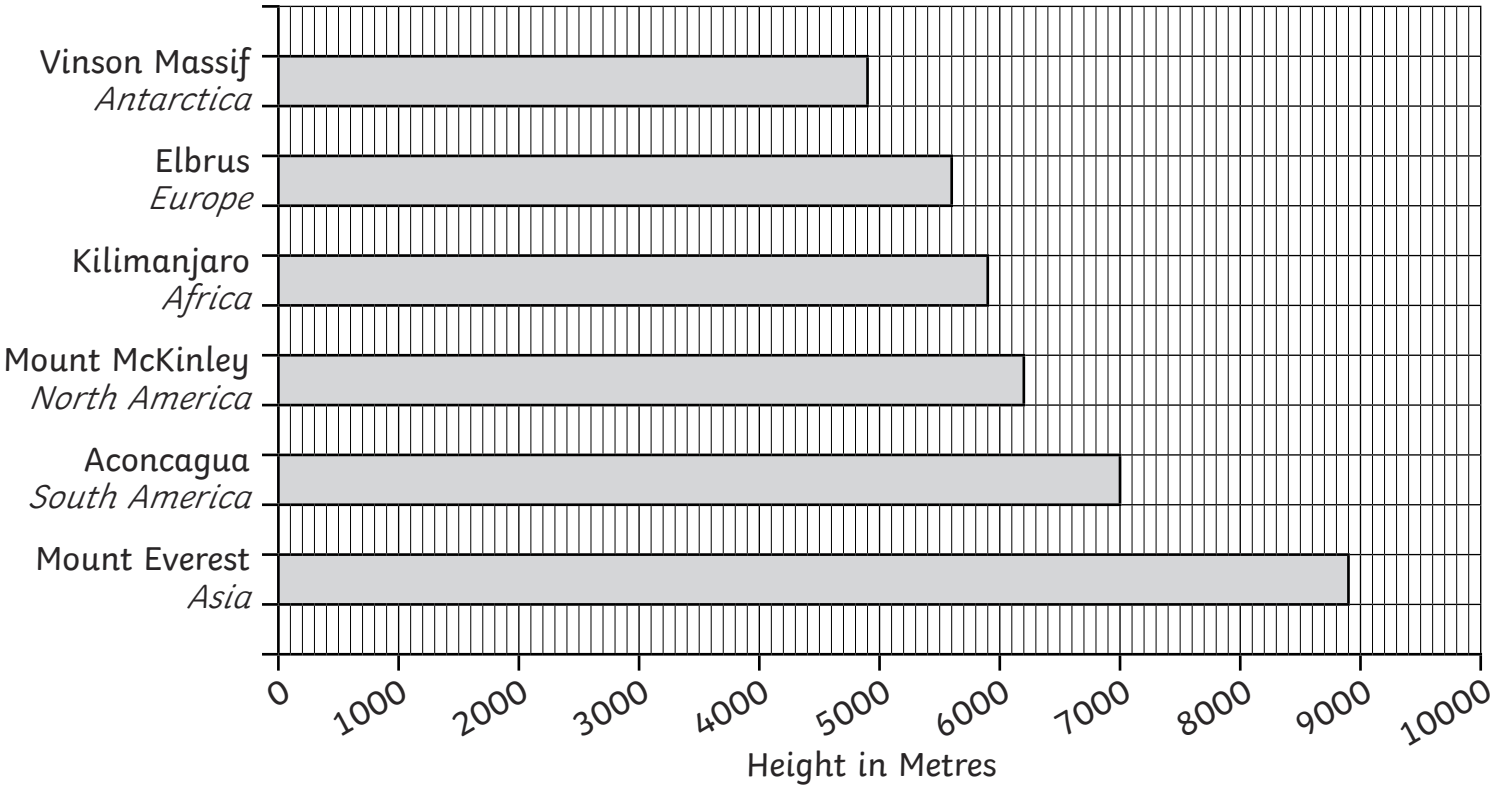

A Graph to Show the Average Temperature and Rainfall on Mount Fuji

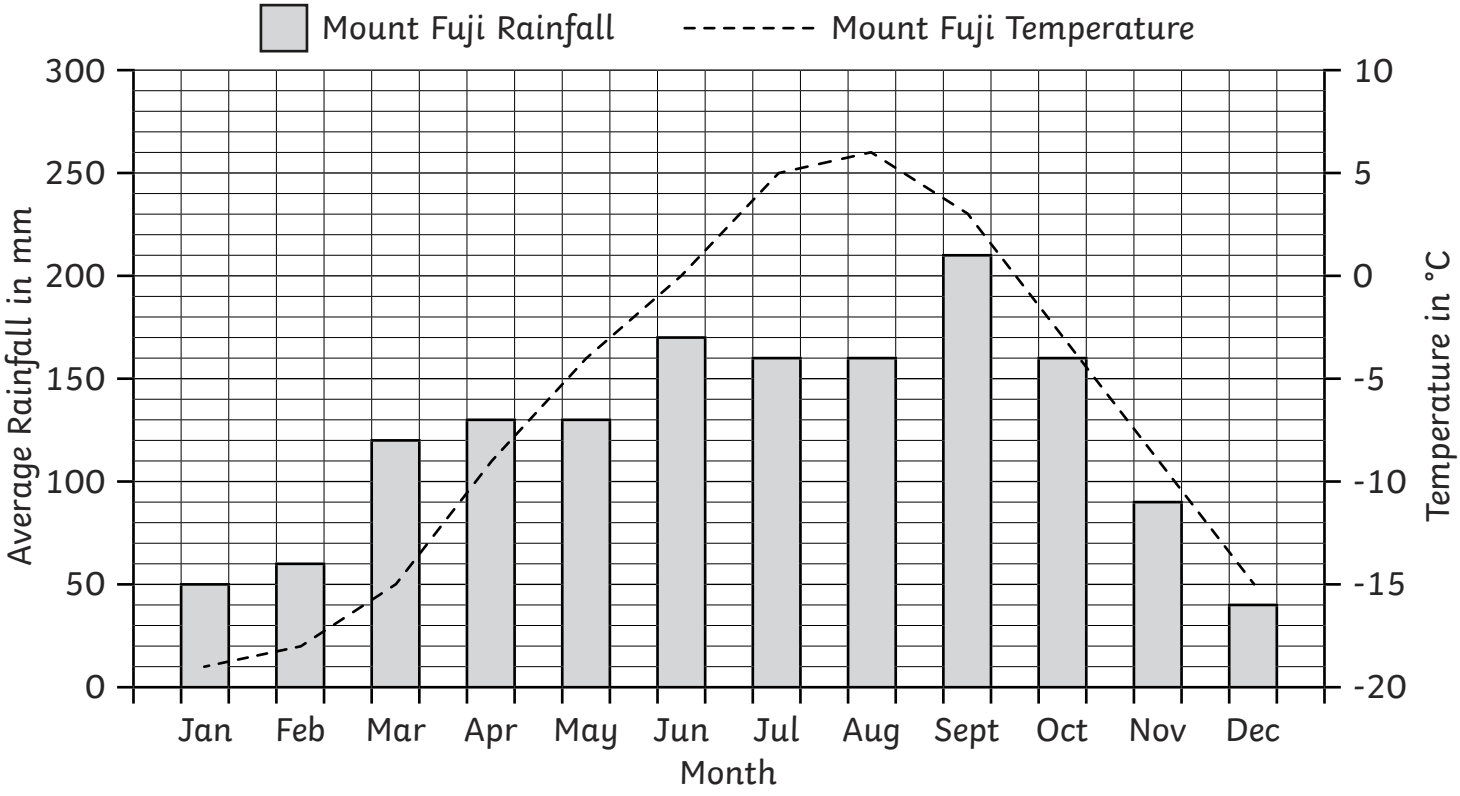

A Graph to Show the Average Temperature and Rainfall on Mount Fuji and Mount Everest

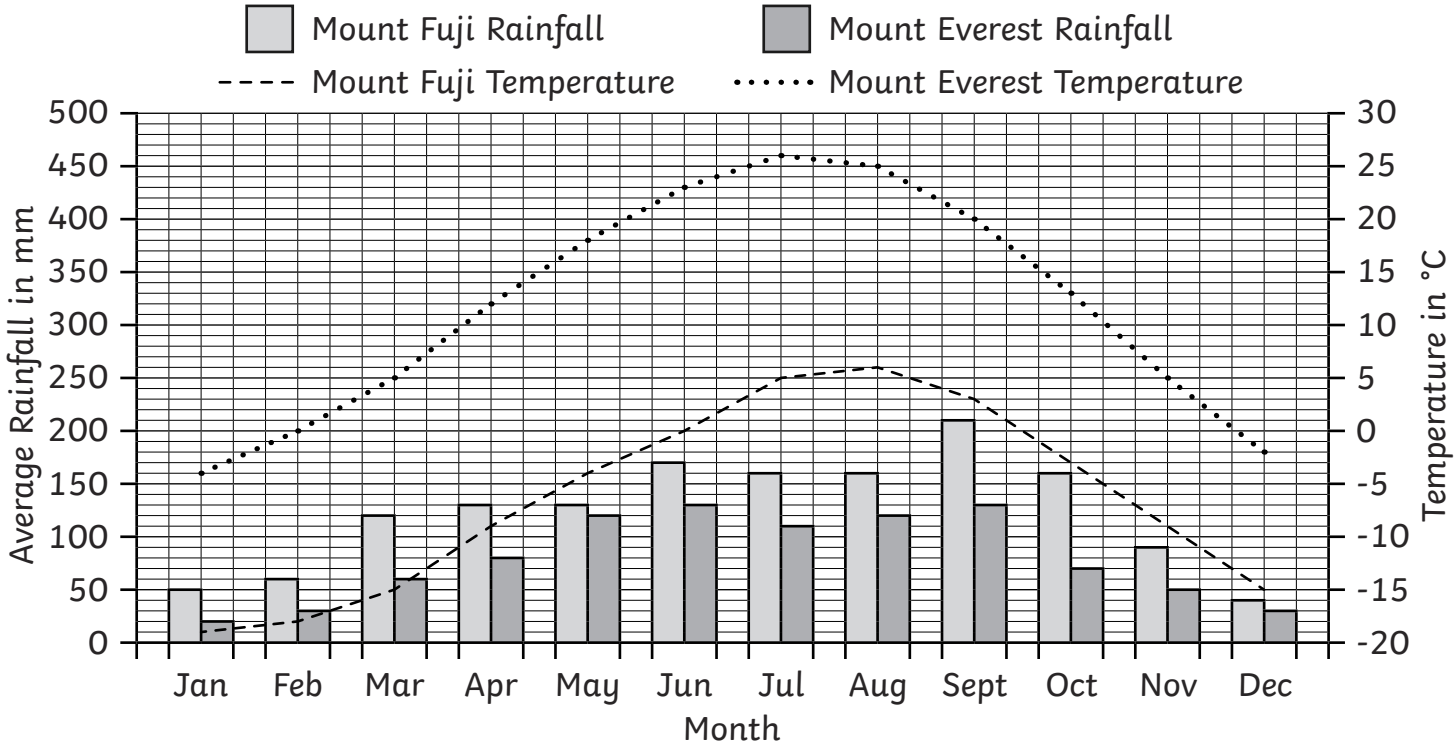

A Line Graph to Show the Average Number of Rainy Days in Different Mountain Climates

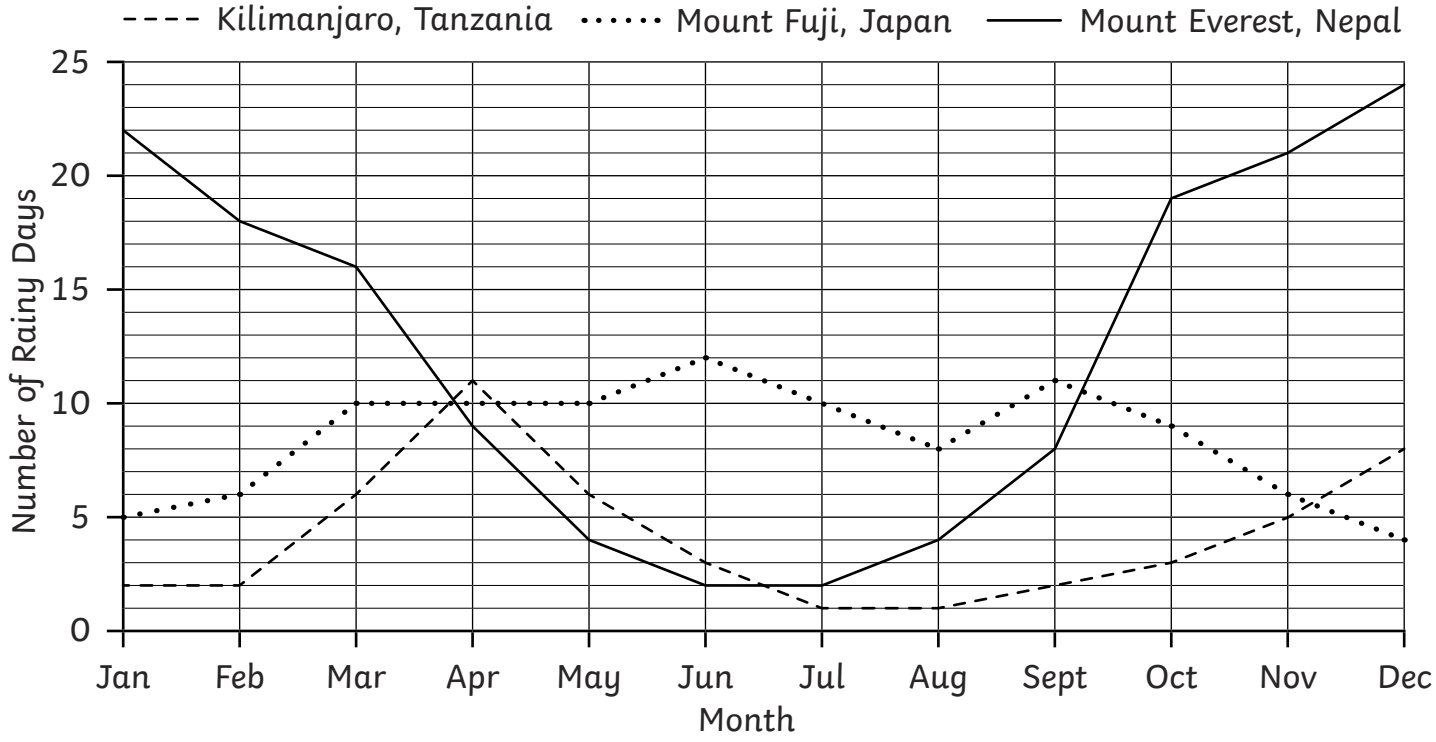

Statistics | Mountain Climate Line Graphs

I can answer questions about data presented in a climate line graph.		
I can interpret data in bar charts and line graphs.		
I can identify the features of a line graph.		
I can answer comparison, sum and difference questions about data presented in a line graph.		

Statistics | Mountain Climate Line Graphs

I can answer questions about data presented in a climate line graph.		
I can interpret data in bar charts and line graphs.		
I can identify the features of a line graph.		
I can answer comparison, sum and difference questions about data presented in a line graph.		

Statistics | Mountain Climate Line Graphs

I can answer questions about data presented in a climate line graph.		
I can interpret data in bar charts and line graphs.		
I can identify the features of a line graph.		
I can answer comparison, sum and difference questions about data presented in a line graph.		

Statistics | Mountain Climate Line Graphs

I can answer questions about data presented in a climate line graph.		
I can interpret data in bar charts and line graphs.		
I can identify the features of a line graph.		
I can answer comparison, sum and difference questions about data presented in a line graph.		

Statistics | Mountain Climate Line Graphs

I can answer questions about data presented in a climate line graph.		
I can interpret data in bar charts and line graphs.		
I can identify the features of a line graph.		
I can answer comparison, sum and difference questions about data presented in a line graph.		

Statistics | Mountain Climate Line Graphs

I can answer questions about data presented in a climate line graph.		
I can interpret data in bar charts and line graphs.		
I can identify the features of a line graph.		
I can answer comparison, sum and difference questions about data presented in a line graph.		

Statistics | Mountain Climate Line Graphs

I can answer questions about data presented in a climate line graph.		
I can interpret data in bar charts and line graphs.		
I can identify the features of a line graph.		
I can answer comparison, sum and difference questions about data presented in a line graph.		

Statistics | Mountain Climate Line Graphs

I can answer questions about data presented in a climate line graph.		
I can interpret data in bar charts and line graphs.		
I can identify the features of a line graph.		
I can answer comparison, sum and difference questions about data presented in a line graph.		

Statistics | Mountain Climate Line Graphs

I can answer questions about data presented in a climate line graph.		
I can interpret data in bar charts and line graphs.		
I can identify the features of a line graph.		
I can answer comparison, sum and difference questions about data presented in a line graph.		

Regent Studies | www.regentstudies.com